文档密级：
商业秘密

REV.	ECN NUMBER	DESCRIPTION	DATE	DRAWN
X1	ECN251318	First Issue	03/19'25	丁第斌
X2	ECN251318	⚠2 ×7 更新尺寸	07/15'25	丁第斌

说明:
1.组装后产品无变形、无污渍、热熔柱没裂纹、
线缆没有压伤,塑胶支架没有烫伤等不良。
After assembly, The product has NO deformation,NO stains,NO cracks in the hot melt column,The cable is not crushed,and the plastic bracket is not burned.
2.100%全检VSWR测试。
100% Full inspection VSWR test.
3.尺寸特性要求DIMENSIONAL CHARACTERISTIC REQUIREMENTS:
3-1:标有"▲"为产品关键特性; MARKED WHIT"▲":THE CRITICAL CHARACTERS;
3-2:标有" ★ "为产品重要特殊特性,要求做CPK或者SPC管控;
MARKED WHIT " ★ ": THE SIGNIFICIENT CHARACTERS, REQUIRE CPK OR SPC CONTROL;
3-3:标有"▼"为产品重点检验尺寸;MARKED WHIT"▼":THE KEY INSPECTION DIMENSIONS;
3-4:标有"⊗"为产品FAI全检尺寸;MARKED WHIT"⊗":THE FAI FULL INSPECTION DIMENSIONS;
3-5:标有"⚠"为产品CCD全检尺寸;MARKED WHIT"⚠":THE CCD FULL INSPECTION DIMENSIONS.
4.有害物质须符合ECTQE-Q-19-001环境有害物质管理基准》管控标准及最终客戶要求.
HSF shall conform to the standard QE-Q-19-001 Environmental Hazardous Substances Management.

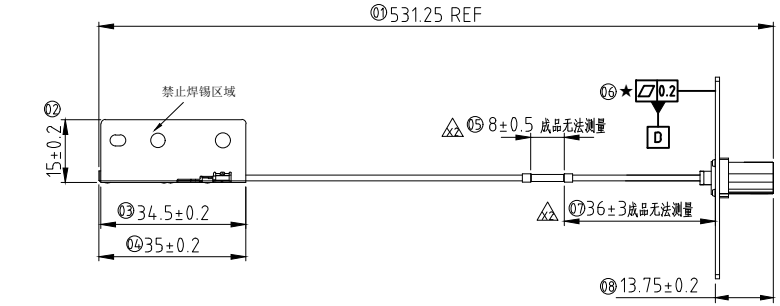

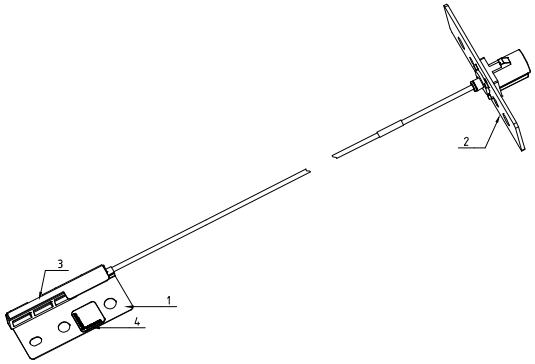

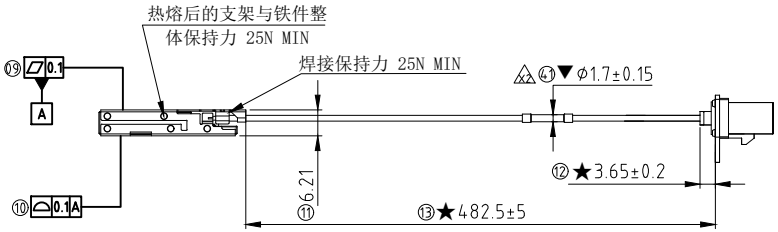

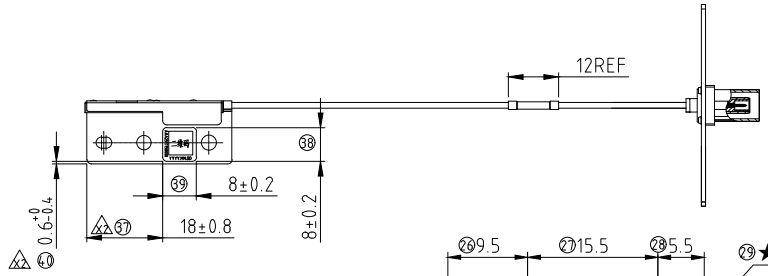

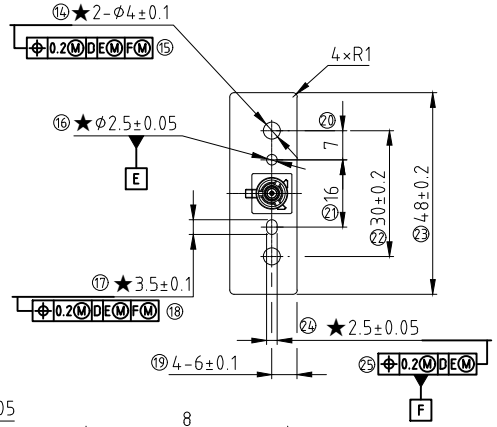

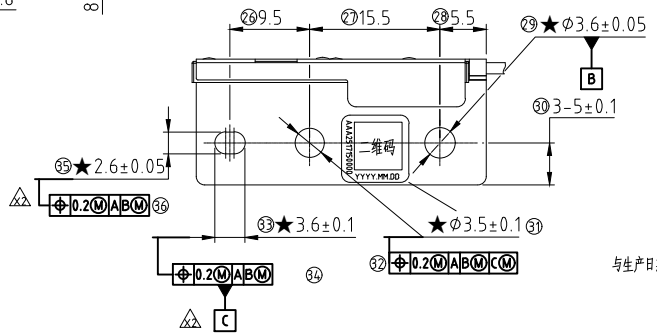

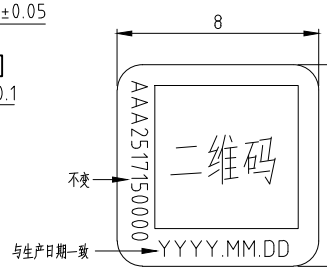

二维码内容如下:
PAAA25171500001P52525988AD
YYYYMMDDSXXXX
解释:
YYYYMMDD,
表示生产日期,与外面标签日期保持一致。
XXXX,
表示流程码,从0001开始。
其他数据保持不变

二维码标签内容

ITEM	DESCRIPTION	QTY	BASE QTY	UNIT
4	标签,8×8mm,PI防油防撕-V777	1	1	PCS_个
3	Housing_PC,BK,14100000601	1	1	PCS_个
2	FAKRA TYPE M TO USS RF I PLUG	1	1	PCS
1	Metal plate_ZE_35_120500049101	1	1	PCS_个

ELECTRIC CONNECTOR TECHNOLOGY

GENERAL TOLERANCE	
XX.± 0.25	ANGLE
X.± 0.20	XX.°± 2°
.X± 0.10	X.°± 1°
.XX± 0.08	.X°± 0.5°

SCALE: 1:1	DRAWN:	DATE:	DWG No.: 600-V777-01	TITLE ANT_IN_ANT-FARKA+CABLE, 15×6.21×100,CAR Customer drawings	REV. X2
UNIT: mm	CHECK:	DATE:	PARTS No.: 81800V777		SHEET: 1/1
SIZE: A4	APPROVE:	DATE:			